HSF

NOTES:
Current Rating: 1.0AMP
Contact Resistance: 20mΩ max
Withstand Voltage: 800V AC/Minute
Insulation Resistance: 1000MΩ min
Operation Temperature: −25℃ to +85℃

Contact Material: Brass
Contact plating: Au Or Sn Over Ni
Insulator Material: PA6T+30%G.F UL94V−0

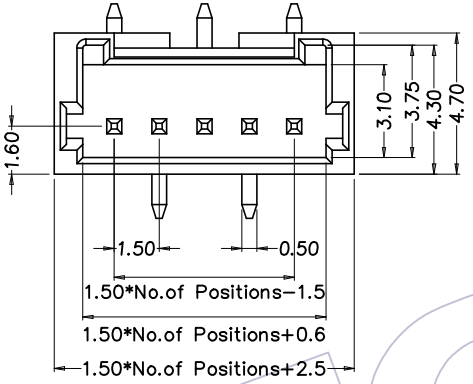

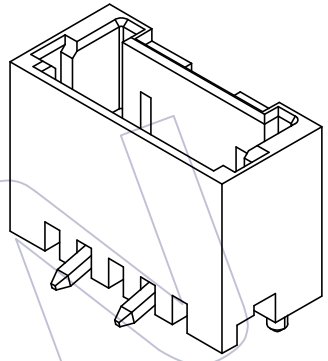

Ordering Information

WF1503-W M XX E X 1

- XX: No.of pins 02~20P
- E: Color B=Black E=Beige W=White
- X: Packing T=Tube R=Tray

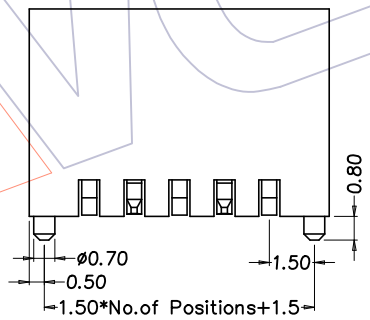

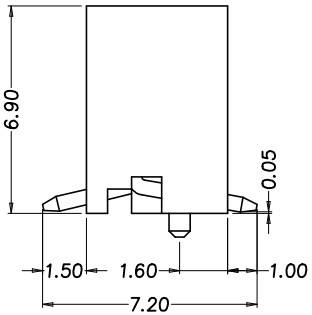

REV	DATE	MODIFICATION DESCRIPTION	CHANGE
A0	2019/01/16	NEW	——

OPERATION	
X.X	±0.40
X.XX	±0.25
X.XXX	±0.15
Angle	± 3°
DIM	TOL

DRAW CHEN.	DATE 2020/08/19	SCALE	FIT
CHECK	DATE	UNIT	mm inch
APPROVE	DATE	SIZE	A4
		SHEET	1/1
		PROJ.	

PART NO. WF1503-WMXXEX1

TITLE: 1.5 Wafer 180° SMT

Customer NO.

WCON
Http: www.wcon.com

WCON-Dongguan
Tel: +86 769 85358920
Fax: +86 769 85358915
E-mail: sales@wcon.com

WCON-Kunshan
Tel: +86 512 57468408
Fax: +86 512 57468468
E-mail: salesks@wcon.com